VIEW ON HV SIDE

PHASE ROTATION
1U 1V 1W

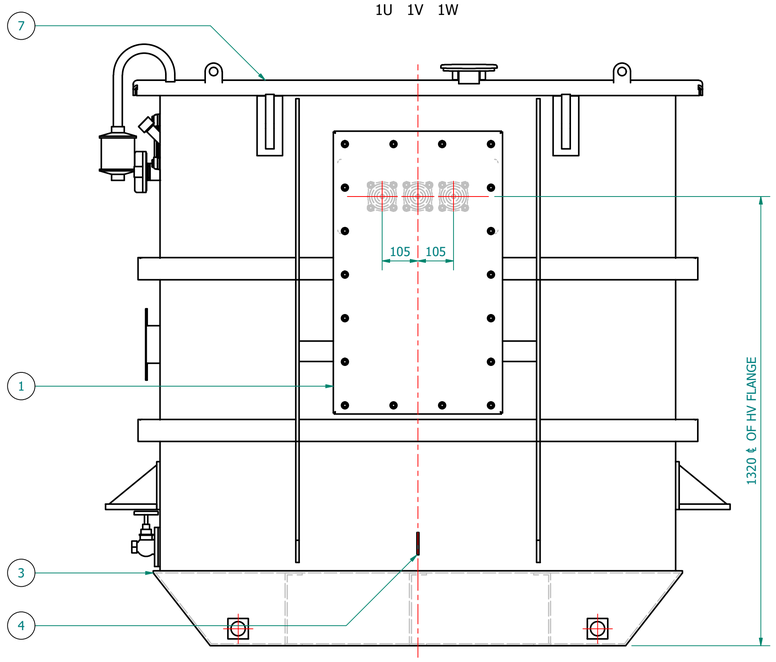

VIEW ON TAP SWITCH END

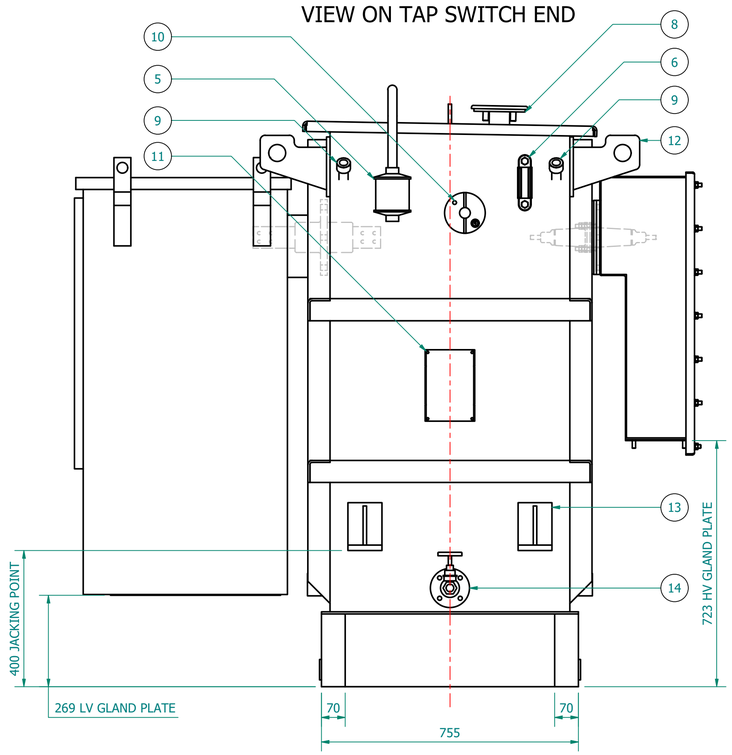

VIEW ON LV SIDE

PHASE ROTATION
2W 2V 2U 2N

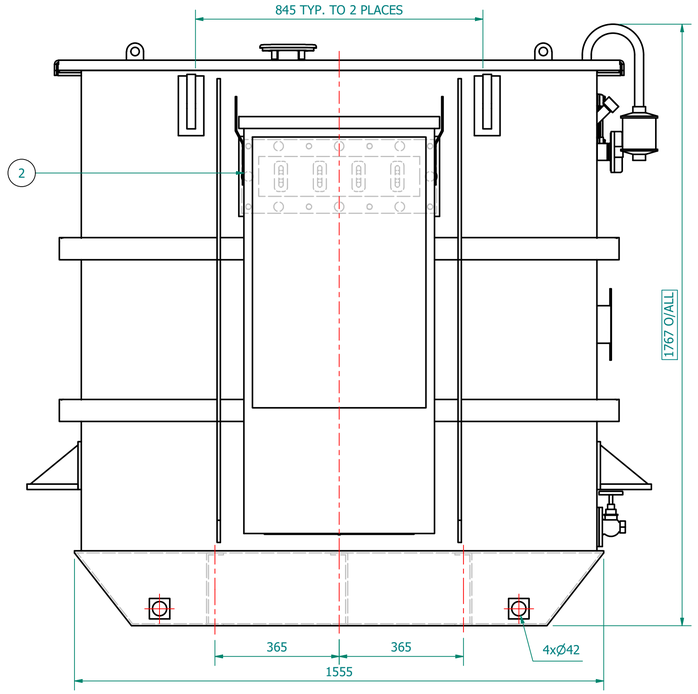

PLAN VIEW

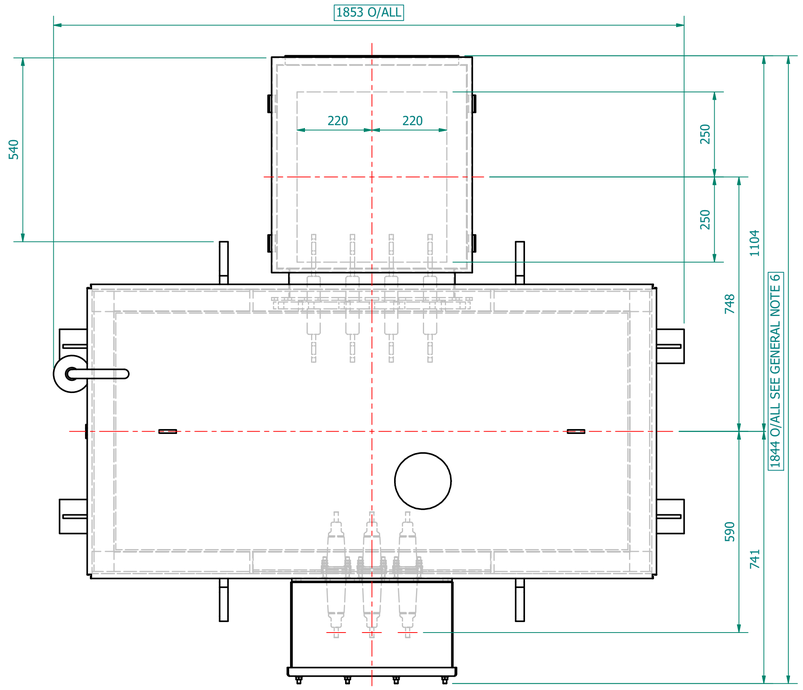

GENERIC LV CABINET SHOWN.
SIZES MAY CHANGE.
FINAL DESIGN MAY REQUIRE SEPARATION
FROM THE TX FOR TRANSPORTATION.

WILSON e4AMORPHOUS ULTIMATE LOW LOSS

TRANSFORMER WEIGHT & VOLUME		
CORE AND WINDING	kg	1950
TANK AND FITTING	kg	690
COOLING LIQUID VOLUME	L	897
COOLING LIQUID WEIGHT	kg	870
TOTAL TX WEIGHT	kg	3510
ADDITIONS TO THE TRANSFORMER WEIGHT		
LV CABINET	kg	--

500kVA ELECTRICAL RATINGS					
No Load Voltage Ratio at Normal Tap	HV Tappings	Vector Group	Frequency	Full-Load Current at Normal Tap	
				HV Side	LV Side
11000 / 415V	+7.5 to -5.0% IN 2.5% INCREMENTS	Dyn11	50Hz	26.243A	695.603A
Design Impedance at Normal Tap	No Load Losses at rated Voltage & Frequency	Full Load Losses at rated Current & at 75°C Temp.	Temp. Rise above Ambient 40°C		
			in Oil by Therm.	in Wdg. by Res.	
4.75%	295W	2750W	60°C	65°C	

GENERAL NOTES	
1	ALL DIMENSIONS ARE IN 'mm'.
2	ALL DIMENSIONS/WEIGHTS ARE SUBJECT TO ± 10% TOLERANCE.
3	ELECTRONIC SCALE - 1:1 (ONLY WRITTEN DIMENSIONS TO BE FOLLOWED).
4	TOLERANCE ON IMPEDANCE PER IEC:60076.
5	PAINT SHADE.: 632 As PER BS:381C (SEMI GLOSS) TO ISO12944 - MIN C4H SPEC.
6	O/ALL DIMS ARE SUBJECT EQUIPMENT DOOR OPENING DISTANCES.
7	
8	
9	

ITEM	QTY	DESCRIPTION
14	1	DRAIN VALVE (25NB) with MALE PLUG
13	4	JACKING PADS
12	4	TRANSFORMER LIFTING LUGS
11	1	RATING & DIAGRAM PLATE (SS)
10	1	OFF-CIRCUIT TAP SWITCH (6-Position & Padlockable)
9	2	THERMOMETER POCKET (3/4" BSP MALE THREAD)
8	1	OIL FILLING PIPE WITH FLANGED COVER
7	1	TOP COVER with LIFTING LUGS (x2)
6	1	OIL LEVEL GAUGE (with 15°) COLD OIL LEVEL MARK
5	1	ENVIRO GEL BREATHER TYPE R
4	2	EARTHING TERMINAL (FLAT TYPE suitable for M12 Bolt)
3	1	TRANSFORMER BASE (SKID TYPE) c/w HAULAGE HOLES & BRACING
2	1	LV CABINET, BOTTOM ENTRY, GENERIC MODEL - SUBJECT TO CHANGE (FACING-'F', BS:2562)
1	1	HV CABLE BOX - 12kV, 3-POLE, HEAT-SHRINK INSULATION, (FACING-'E' BS:2562) SUITABLE FOR 1 x 3c CABLE - MAX. 185mm.sq

PARTS LIST

ESSENTIAL LABELS

ITEM 10 — TAP CHANGER WARNING LABEL (OFF-CIRCUIT TAP CHANGER / DO NOT OPERATE LIVE)

ITEM 6 — - C.O.L. 15°C - COLD COOLANT LEVEL

ITEM 2 — LV WARNING LABEL (Supplier by Wilson Power Solutions. Tel. 0113 271 7588 Fax. 0113 277 5124 www.wilsonpowersolutions.co.uk)

ITEM 1 — HV WARNING LABEL (DANGER High Voltage. Supplier by Wilson Power Solutions. Tel. 0113 271 7588 Fax. 0113 277 5124 www.wilsonpowersolutions.co.uk)

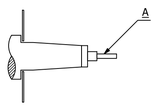

HV TERMINAL DETAILS (01)		
0 - 250A	A = M12	20 NM
251 - 400A	A = M16	25 NM

IF IN DOUBT - **ASK**. REMOVE ALL SHARP EDGES. **DO NOT** SCALE. DRAWING **NOT TO SCALE**

BASED ON:

REVISION HISTORY

REV	REV BY	VERIFIED	APPROVED	DESCRIPTION

CURRENT REVISION

REVISION DESCRIPTION	REV	PROJECT	DRAWING TITLE	DRAWN BY:
ORIGINAL	00	CUSTOMER	GENERAL ARRANGEMENT DRAWING FOR 500kVA WILSON e4 AMORPHOUS ULTIMATE LOW LOSS 11000/415V, 50Hz, Dyn11, KNAN AL WOUND DISTRIBUTION TRANSFORMER LV CABINET	SATHWIK
	DATE	S.O. NUMBER		DATE:
REV. BY: SATHWIK	24-MAR-2026	P.O. NUMBER		24-03-2026
VERIFIED:		W.O. NUMBER		DRAWING NO.: WPS-E4-500-AL-A001-KNAN
APPROVED:				SHEET 1 OF 1

WILSON POWER SOLUTIONS
Wilson Power Solutions Ltd.
Westland Square, Leeds,
West Yorkshire LS11 5SS, United Kingdom
Tel:+44 (0) 113 271 7588
Fax:+44 (0) 113 277 5124
web: www.wilsonpowersolutions.co.uk email: info@wilsonpowersolutions.co.uk

WPDF02 REV 0 25-NOV-14