VIEW ON HV SIDE

PHASE ROTATION
1U 1V 1W

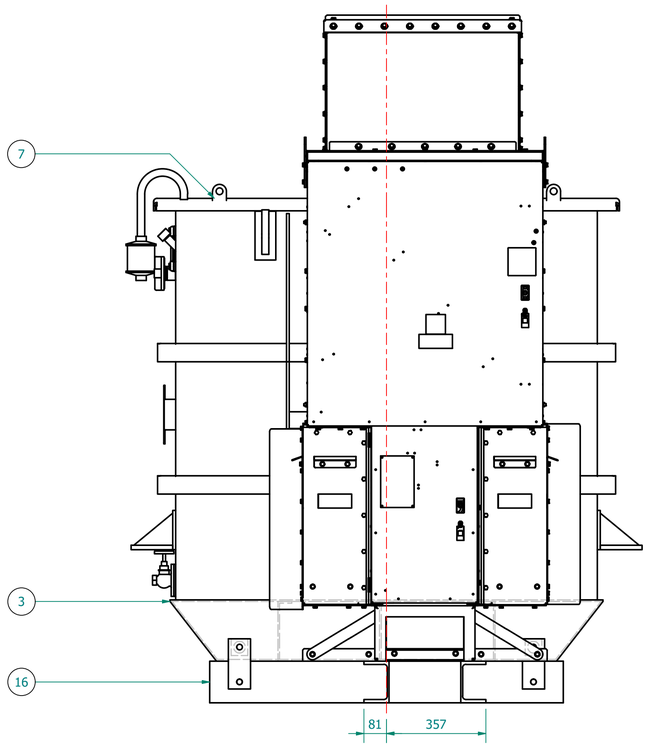

VIEW ON TAP SWITCH END

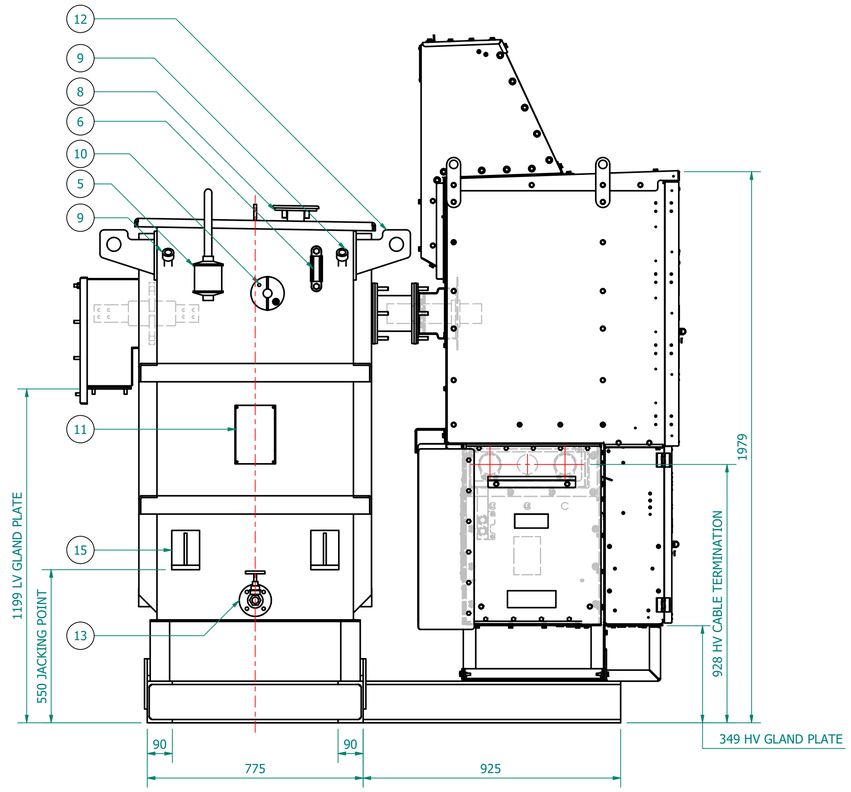

VIEW ON LV SIDE

PHASE ROTATION
2W 2V 2U 2N

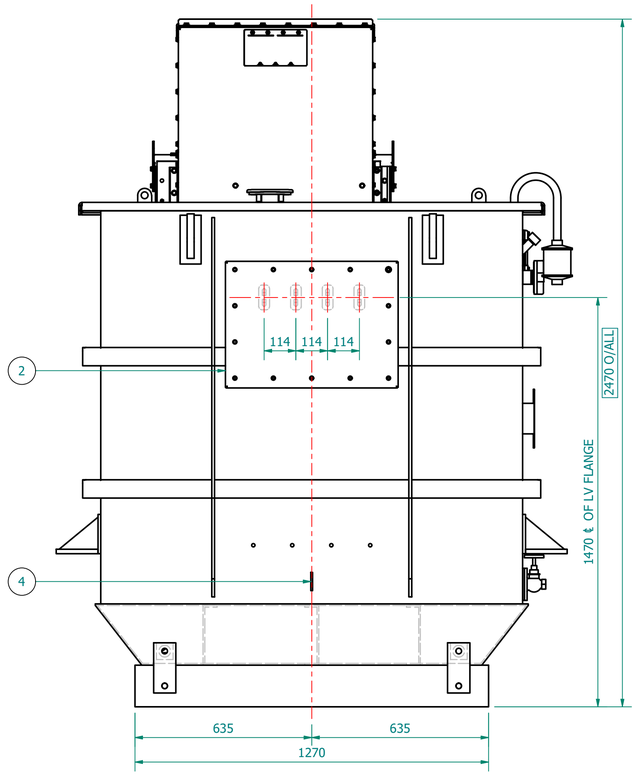

PLAN VIEW

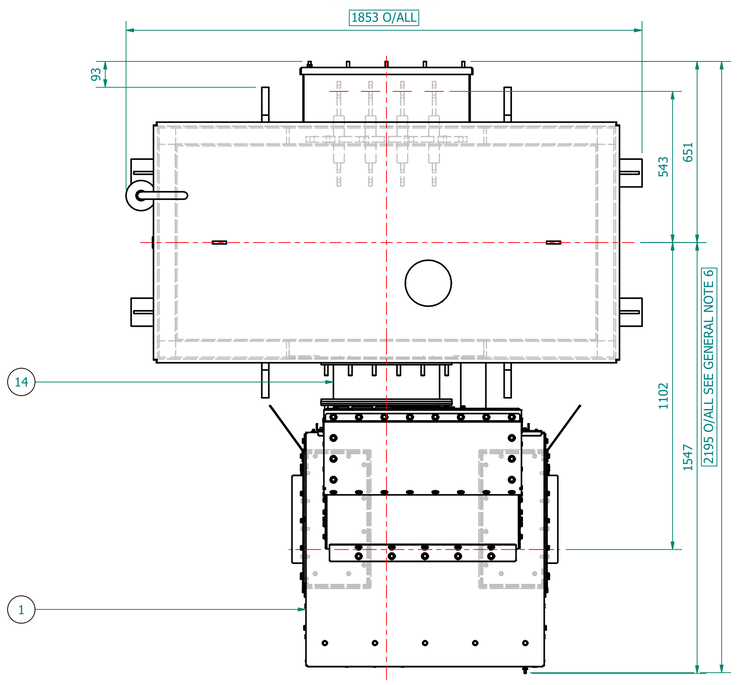

TRANSFORMER WEIGHT & VOLUME		
CORE AND WINDING	kg	1950
TANK AND FITTING	kg	690
COOLING LIQUID VOLUME	L	897
COOLING LIQUID WEIGHT	kg	730
TOTAL TX WEIGHT	kg	3370
ADDITIONS TO THE TRANSFORMER WEIGHT		
HV UNIT	kg	650
SUPPORT FRAME	kg	--

VIEW OF LV SIDE - CABLE CLEAT STUDS

CABLES MUST BE SUPPORTED IN ACCORDANCE WITH - CURRENT IET Wiring Regulations BS7671 & IEC 61914

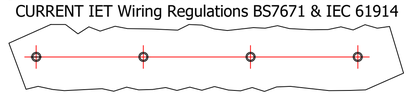

4x M12 x 30 @ 140mm PITCH ~430mm FROM THE GROUND

500kVA	ELECTRICAL RATINGS				
No Load Voltage Ratio at Normal Tap	HV Tappings	Vector Group	Frequency	Full-Load Current at Normal Tap	
				HV Side	LV Side
11000 / 415V	+7.5 to -5.0% IN 2.5% INCREMENTS	Dyn11	50Hz	26.243A	695.603A
Design Impedance at Normal Tap	No Load Losses at rated Voltage & Frequency	Full Load Losses at rated Current & at 75°C Temp.	Temp. Rise above Ambient 40°C		
			in Oil by Therm.	in Wdg. by Res.	
4.75%	295W	2750W	60°C	65°C	

GENERAL NOTES	
1	ALL DIMENSIONS ARE IN 'mm'.
2	ALL DIMENSIONS/WEIGHTS ARE SUBJECT TO ± 10% TOLERANCE.
3	ELECTRONIC SCALE - 1:1 (ONLY WRITTEN DIMENSIONS TO BE FOLLOWED).
4	TOLERANCE ON IMPEDANCE PER IEC:60076.
5	PAINT SHADE.: 632 As PER BS:381C (SEMI GLOSS) TO ISO12944 - MIN C4H SPEC.
6	O/ALL DIMS ARE SUBJECT TO EQUIPMENT DOOR OPENING DISTANCES.
7	
8	
9	

ESSENTIAL LABELS

ITEM 10 — TAP CHANGER WARNING LABEL
ITEM 6 — COLD COOLANT LEVEL
ITEM 2 — LV WARNING LABEL
ITEM 1 — HV WARNING LABEL

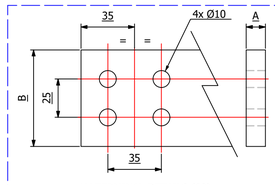

LV TERMINAL DETAILS (02)

1700A	A = 12.5 mm	B = 63 mm
2500A	A = 20 mm	B = 63 mm
3150A	A = 35 mm	B = 63 mm
4000A	A = 35 mm	B = 70 mm

ITEM	QTY	DESCRIPTION
16	1	HV SUPPORT FRAME
15	4	JACKING PADS
14	1	HV THROAT
13	1	DRAIN VALVE (25NB) with MALE PLUG
12	4	TRANSFORMER LIFTING LUGS
11	1	RATING & DIAGRAM PLATE (SS)
10	1	OFF-CIRCUIT TAP SWITCH (6-Position & Padlockable)
9	2	THERMOMETER POCKET (3/4" BSP MALE THREAD)
8	1	OIL FILLING PIPE WITH FLANGED COVER
7	1	TOP COVER with LIFTING LUGS (x2)
6	1	OIL LEVEL GAUGE (with 15°) COLD OIL LEVEL MARK
5	1	ENVIRO GEL BREATHER TYPE R
4	2	EARTHING TERMINAL (FLAT TYPE suitable for M12 Bolt)
3	1	TRANSFORMER BASE (SKID TYPE) c/w HAULAGE HOLES & BRACING
2	1	LV CABLE BOX - 1.1kV, 4-POLE, AIR INSULATION, (FACING-'F', BS:2562) SUITABLE FOR 1 x 1c CABLES PER PHASE & N - MAX. 630mm.sq
1	1	HV RMU - 11kV, 200A, GCB, 630A BUS [Schneider RN2AIR], (FACING-'E' BS:2562)

PARTS LIST

IF IN DOUBT - **ASK**. REMOVE ALL SHARP EDGES. **DO NOT** SCALE. DRAWING **NOT TO SCALE**

BASED ON:

REVISION HISTORY

REV	REV BY	VERIFIED	APPROVED	DESCRIPTION

CURRENT REVISION

REVISION DESCRIPTION	REV	DATE
ORIGINAL	00	22-MAY-2026

REV. BY: RAMESH J
VERIFIED:
APPROVED:

PROJECT	
CUSTOMER	
S.O. NUMBER	
P.O. NUMBER	
W.O. NUMBER	

DRAWING TITLE

GENERAL ARRANGEMENT DRAWING FOR
500kVA WILSON e4 AMORPHOUS ULTIMATE LOW LOSS
11000/415V, 50Hz, Dyn11, ONAN
AL WOUND DISTRIBUTION TRANSFORMER
AIRSET

DRAWN BY: RAMESH J
DATE: 22/05/2026
DRAWING NO.: **WPS-E4-500-AL-AIRSET**

Wilson Power Solutions Ltd.
Westland Square, Leeds,
West Yorkshire LS11 5SS, United Kingdom
Tel:+44 (0) 113 271 7588
Fax:+44 (0) 113 277 5124
web: www.wilsonpowersolutions.co.uk email: info@wilsonpowersolutions.co.uk

SHEET 1 OF 1

WPDF02 REV 0 25-NOV-14