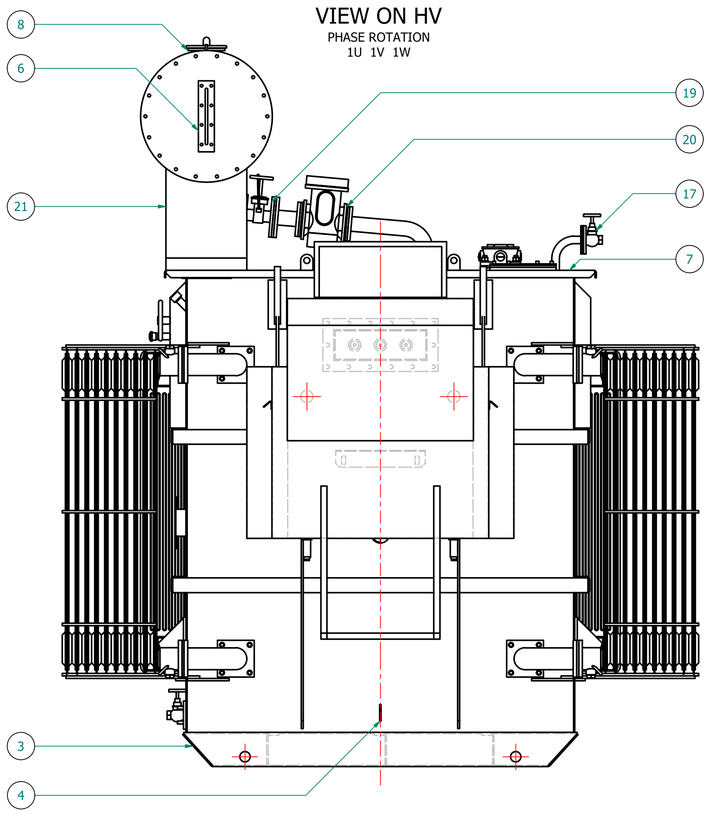


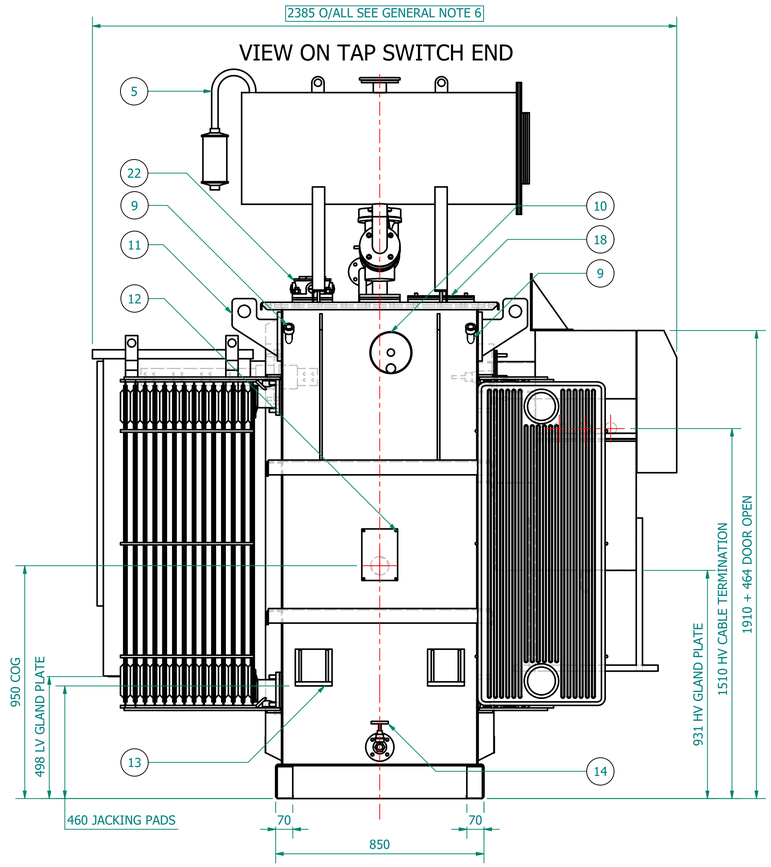


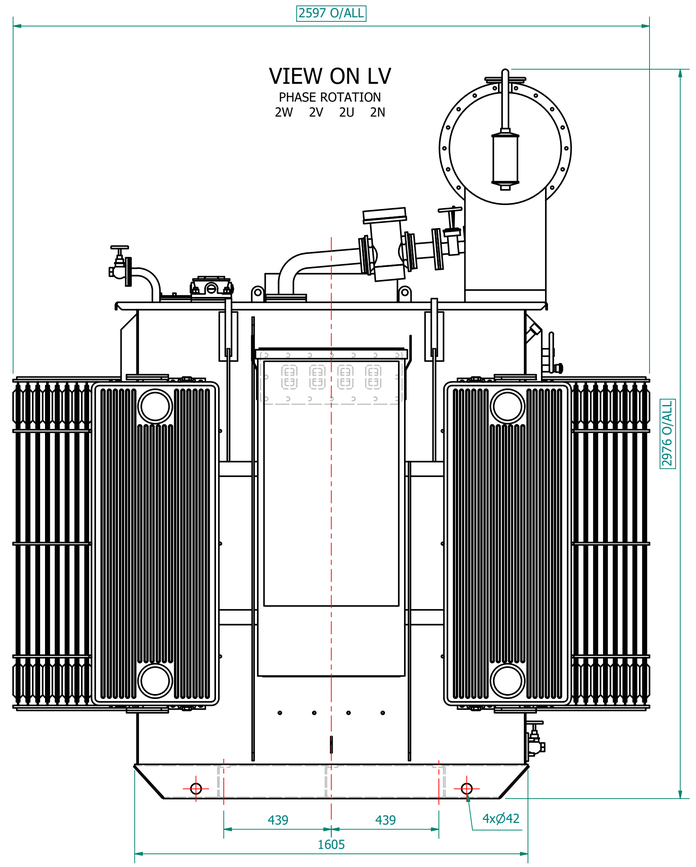


GENERIC LV CABINET SHOWN.
SIZES MAY CHANGE.
FINAL DESIGN MAY REQUIRE SEPARATION
FROM THE TX FOR TRANSPORTATION.

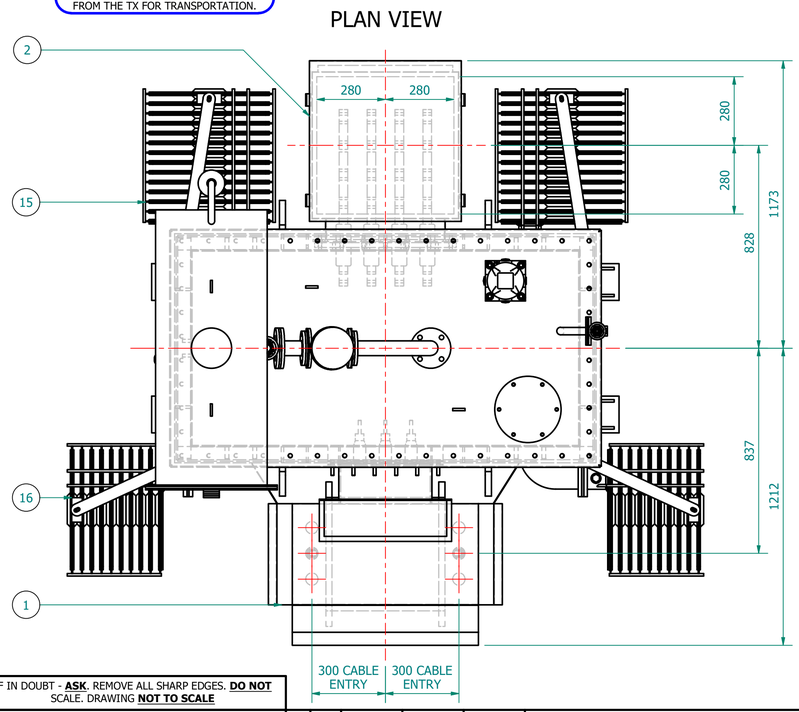


IF IN DOUBT - **ASK**. REMOVE ALL SHARP EDGES. **DO NOT** SCALE. DRAWING **NOT TO SCALE**

| TRANSFORMER WEIGHT & VOLUME | | |
|---|---|---|
| CORE AND WINDING | kg | 4040 |
| TANK AND FITTING | kg | 1900 |
| COOLING LIQUID VOLUME | L | 1790 |
| COOLING LIQUID WEIGHT | kg | 1460 |
| TOTAL TX WEIGHT | kg | 7400 |
| ADDITIONS TO THE TRANSFORMER WEIGHT | | |
| HV UNIT | Kg | 385 |
| LV CABINET | kg | - |

| 3000kVA | ELECTRICAL RATINGS | | | | |
|---|---|---|---|---|---|
| No Load Voltage Ratio at Normal Tap | HV Tappings | Vector Group | Frequency | Full-Load Current at Normal Tap | |
| | | | | HV Side | LV Side |
| 11000 / 433V | +5.0 to -5.0% in 2.5% INCREMENTS | Dyn11 | 50Hz | 157.459A | 4000.117A |
| Design Impedance at Normal Tap | No Load Losses at rated Voltage & Frequency | Full Load Losses at rated Current & at 75°C Temp. | Temp. Rise above Ambient 40°C | | |
| | | | in Oil by Therm. | in Wdg. by Res. | |
| 6.0% | 1886W | 21961W | 60°C | 65°C | |

ESSENTIAL LABELS

ITEM 10 — TAP CHANGER WARNING LABEL

ITEM 6 — COLD COOLANT LEVEL

ITEM 2 — LV WARNING LABEL

ITEM 1 — HV WARNING LABEL

| GENERAL NOTES | |
|---|---|
| 1 | ALL DIMENSIONS ARE IN 'mm'. |
| 2 | ALL DIMENSIONS/WEIGHTS ARE SUBJECT TO ± 10% TOLERANCE. |
| 3 | ELECTRONIC SCALE - 1:1 (ONLY WRITTEN DIMENSIONS TO BE FOLLOWED). |
| 4 | TOLERANCE ON IMPEDANCE PER IEC:60076. |
| 5 | PAINT SHADE.: 632 AS PER BS:381C (SEMI GLOSS) TO ISO12944 - MIN C4H SPEC. |
| 6 | O/ALL DIM IS SUBJECT TO EQUIPMENT DOOR OPENING DISTANCES. |
| 7 | EXTENDED ELBOWS FITTED TO HV SIDE. |
| 8 | |
| 9 | |

| ITEM | QTY | DESCRIPTION |
|---|---|---|
| 22 | 1 | WTI CT BUSHING TERMINALS ENCLOSED IN BOX |
| 21 | 1 | DETACHABLE CONSERVATOR WITH OIL LEVEL INDICATOR |
| 20 | 1 | BUCHHOLZ RELAY EE2 (WITH ALARM & TRIP CONTACT) |
| 19 | 1 | SHUT OFF VALVE FOR CONSERVATOR |
| 18 | 1 | PROVISION FOR PRESSURE RELIEF DEVICE |
| 17 | 1 | OIL FILLING VALVE WITH ONE SIDE FLANGED & PLUG |
| 16 | 2 | DETACHABLE RADIATORS with AIR-RELEASE & DRAIN PLUG (520W x 1200C x 10S x 40P) |
| 15 | 2 | DETACHABLE RADIATORS with AIR-RELEASE & DRAIN PLUG (520W x 1200C x 14S x 40P) |
| 14 | 1 | DRAIN VALVE (25NB) with MALE PLUG |
| 13 | 4 | JACKING PADS |
| 12 | 1 | RATING & DIAGRAM PLATE (SS) |
| 11 | 4 | TRANSFORMER LIFTING LUGS |
| 10 | 1 | OFF-CIRCUIT TAP SWITCH (5-Position & Padlockable) |
| 9 | 2 | THERMOMETER POCKET (3/4" BSP MALE THREAD) |
| 8 | 1 | OIL FILLING PIPE WITH FLANGED COVER |
| 7 | 1 | TOP COVER with LIFTING LUGS (x2) |
| 6 | 1 | OIL LEVEL GAUGE (with 15°) COLD OIL LEVEL MARK |
| 5 | 1 | ENVIRO GEL BREATHER TYPE R1 |
| 4 | 2 | EARTHING TERMINAL (FLAT TYPE suitable for M12 Bolt) |
| 3 | 1 | TRANSFORMER BASE (SKID TYPE) c/w HAULAGE HOLES & BRACING |
| 2 | 1 | LV CABINET, BOTTOM ENTRY, GENERIC - SUBJECT TO CHANGE, (FACING-'F', BS:2562) |
| 1 | 1 | HV RMU - 11kV, 200A, GCB, 630A BUS [Schneider RN2d-Tx/21] x PROTECTION, (FACING-'E' BS:2562) |

PARTS LIST

BASED ON:

LAST DEFINITION

| REV | REV BY | VERIFIED | APPROVED | DESCRIPTION |
|---|---|---|---|---|

LAST REVISION

| REVISION DESCRIPTION | REV |
|---|---|
| ORIGINAL | 00 |

| | | DATE |
|---|---|---|
| REV. BY: | M. STOTSJUK | 22-AUG-2021 |
| VERIFIED: | | |
| APPROVED: | | |

| | |
|---|---|
| PROJECT | |
| CUSTOMER | |
| S.O. NUMBER | |
| P.O. NUMBER | |
| W.O. NUMBER | |

DRAWING TITLE

GENERAL ARRANGEMENT DRAWING FOR
3000kVA WILSON T2 ECOTRANS
11000/433V, 50Hz, Dyn11, ONAN/KNAN
AL WOUND DISTRIBUTION TRANSFORMER
LV CABINET & RN2d

**Wilson Power Solutions Ltd.**
Westland Square, Leeds,
West Yorkshire LS11 5SS, United Kingdom
Tel:+44 (0) 113 271 7588
Fax:+44 (0) 113 277 5124
web: www.wilsonpowersolutions.co.uk email: info@wilsonpowersolutions.co.uk

| DRAWN BY: | M. STOTSJUK | DATE: 22/08/2021 | DRG NO: | **WPS-T2-3000-AL-A007** |
|---|---|---|---|---|

WPDF02 REV 0 25-NOV-14